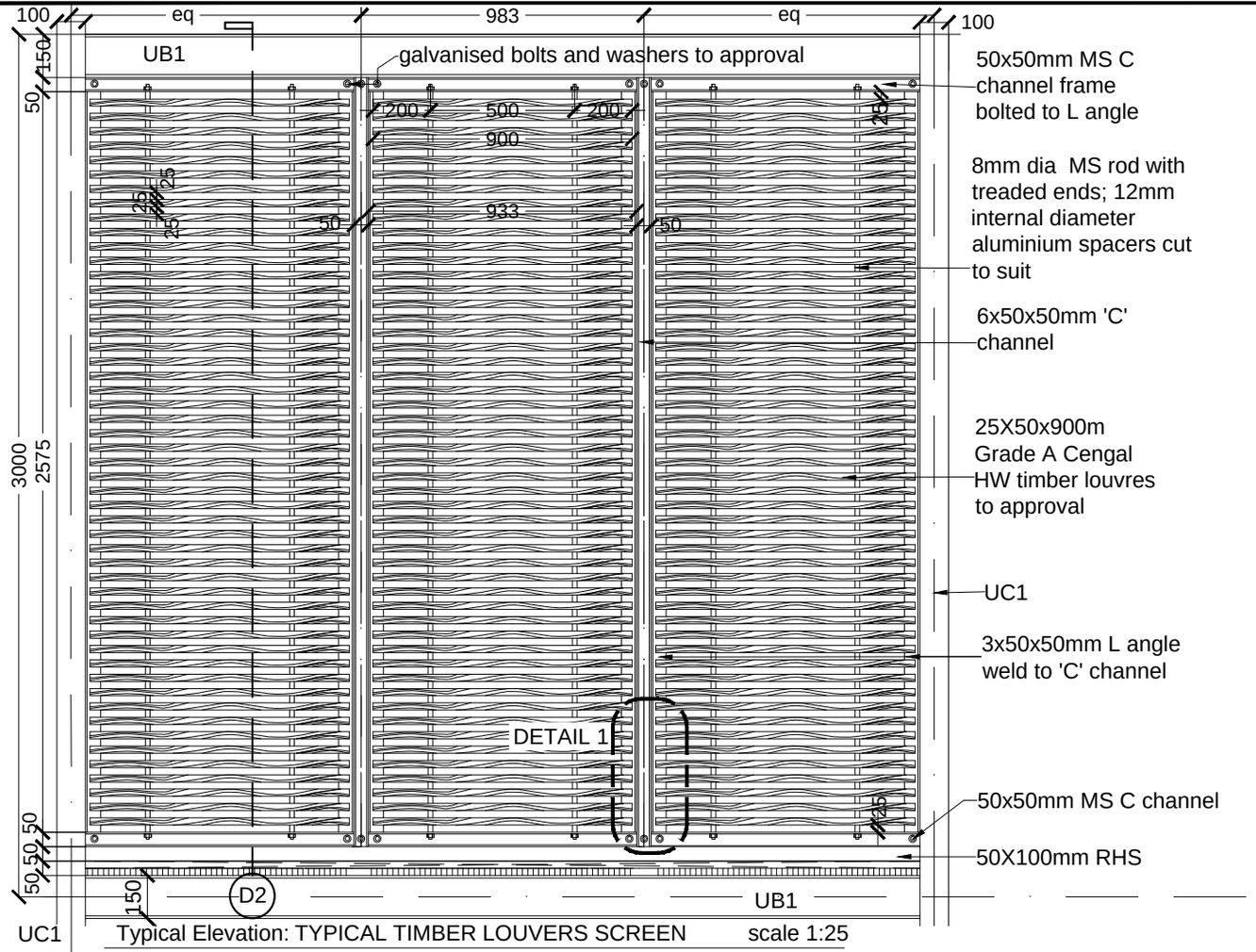

Typical Elevation: TYPICAL TIMBER LOUVERS SCREEN scale 1:25

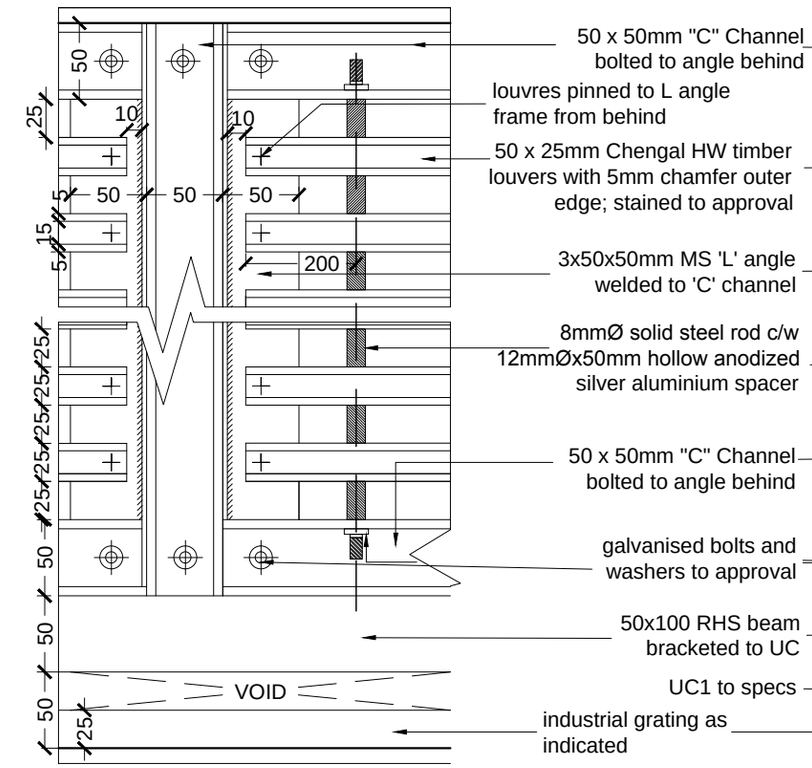

D1 ELEVATION: TIMBER SCREEN scale 1:5

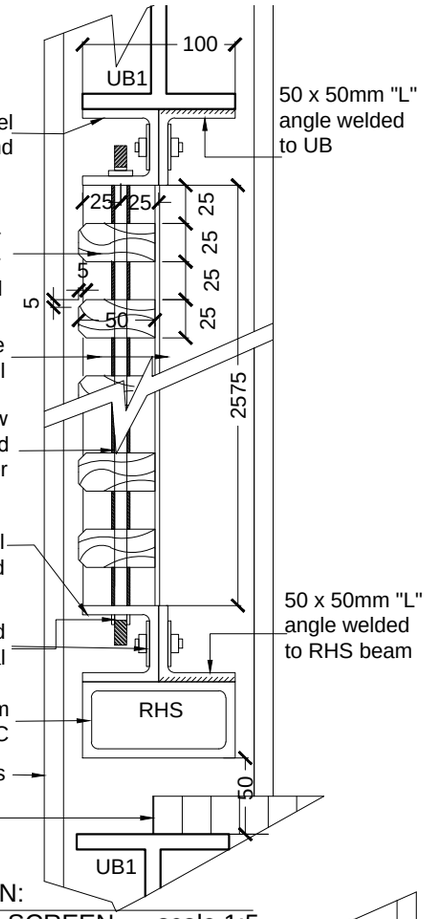

D2 SECTION: TIMBER SCREEN scale 1:5

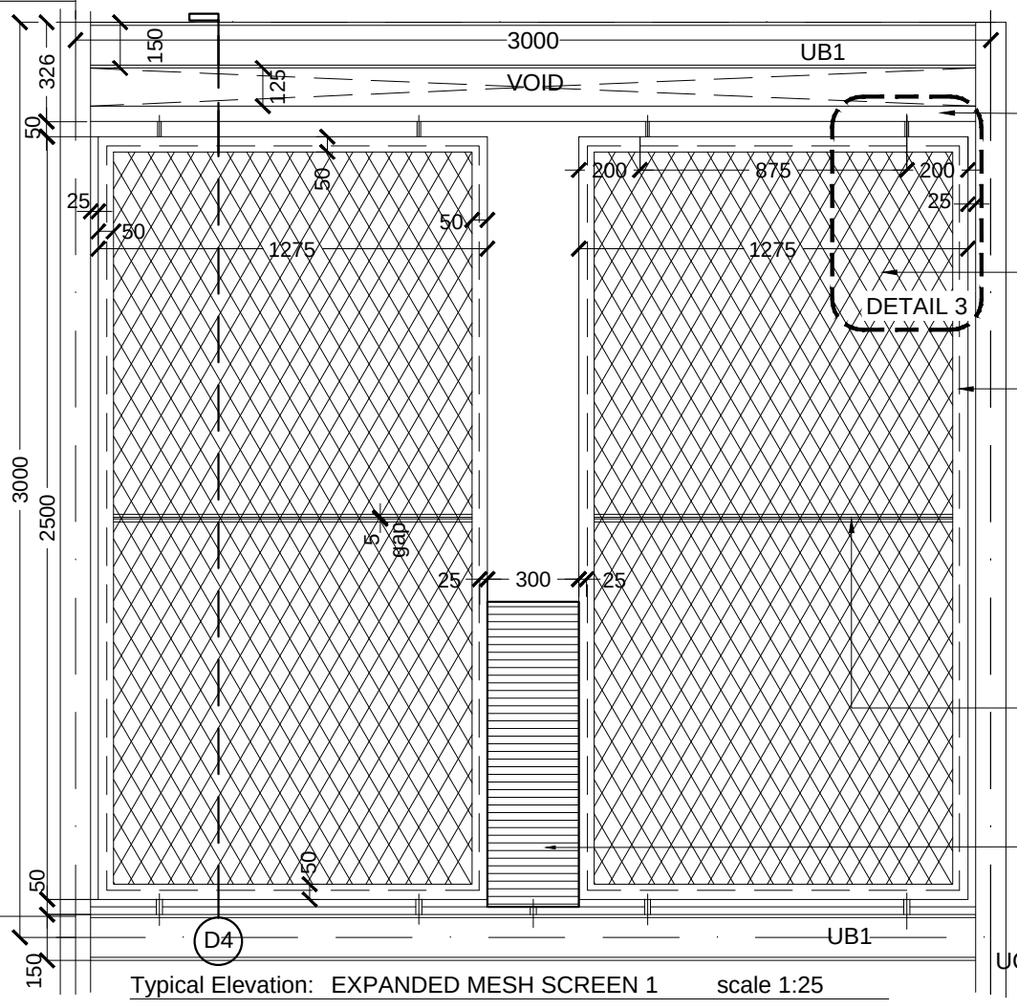

Typical Elevation: EXPANDED MESH SCREEN 1 scale 1:25

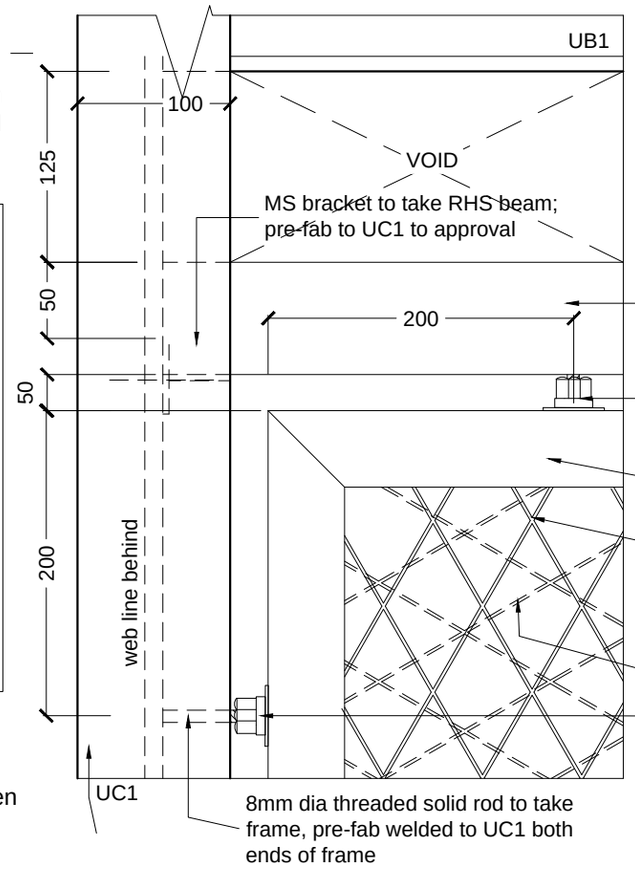

D3 ELEVATION: EXPANDED MESH PANEL scale 1:5

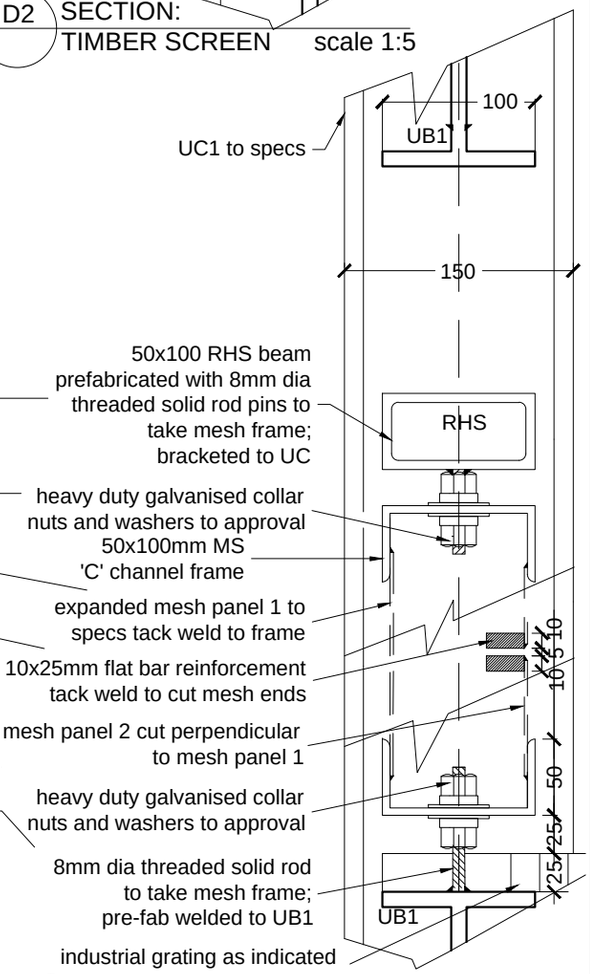

D4 SECTION: EXPANDED MESH PANEL scale 1:5