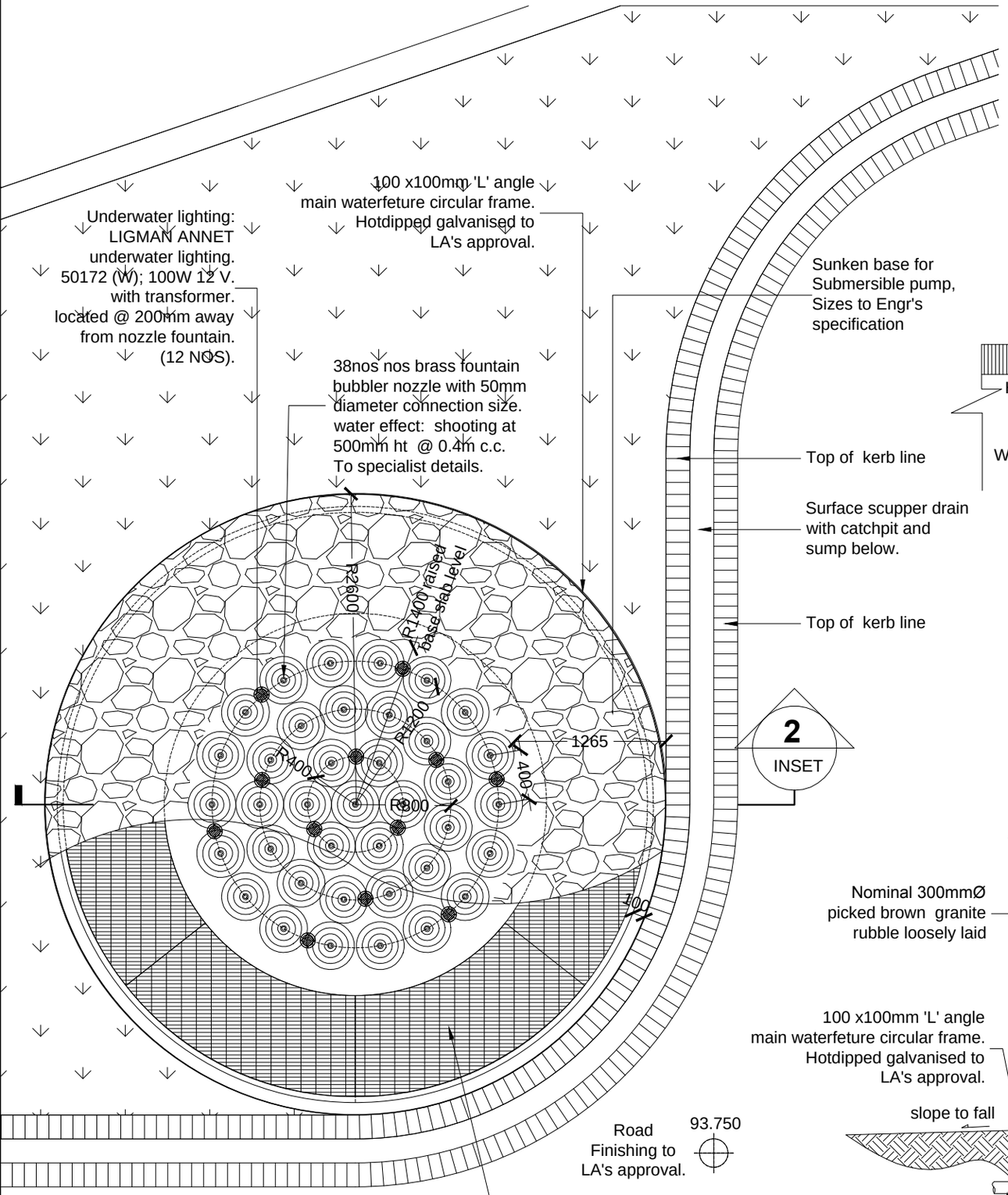

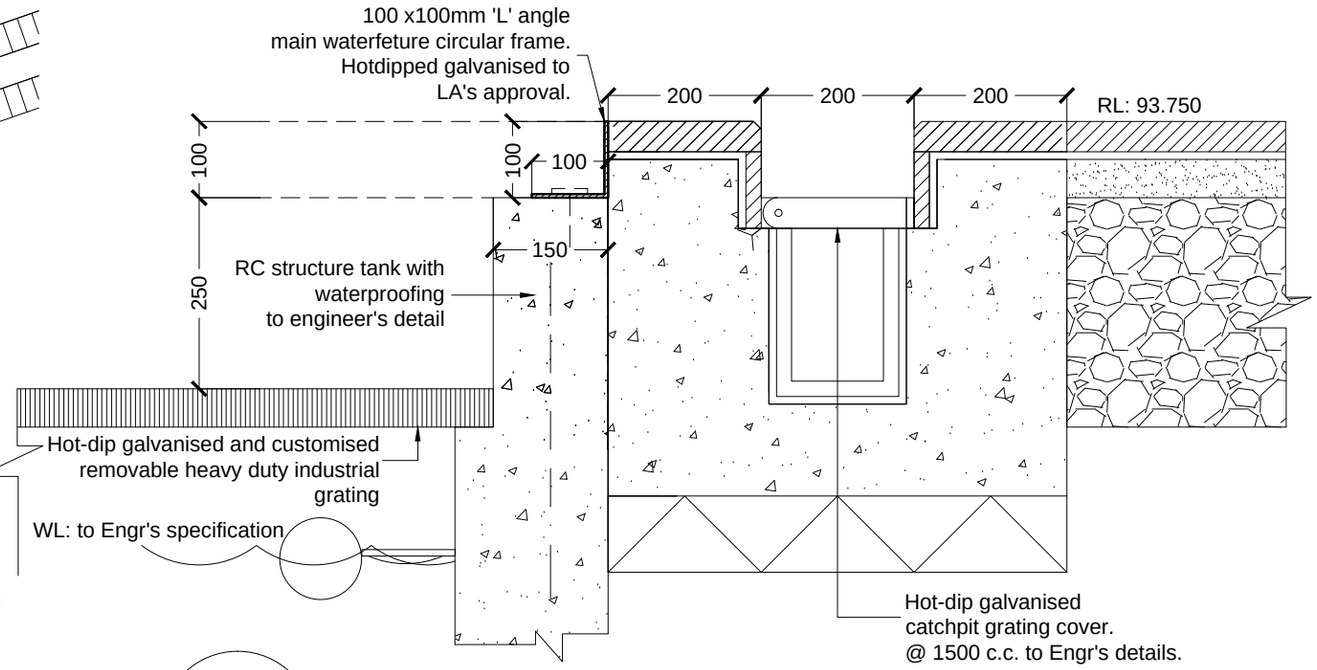

2a INSET **TYPICAL DETAIL 2a:** 'L' angle frame

SCALE 1:10

NOTE:
1. POOL DEPTH : 15mm .
2. BRASS FOUNTAIN BUBBLER NOZZLE WITH 50MM DIAMETER CONNECTION SIZE TO SPECIALIST DETAILS. TO BE ON SEPERATE TIMER SYSTEM.
3. WATER EFFECT: SHOOTING AT 500MM HT @ 0.4M C.C. TO BE ON SEPERATE TIMER SYSTEM.
4. ALL POOLS TO HAVE DRAINAGE OUTLET TO NEAREST DOWNPIPE.
5. ALL CABLING AND PIPING TO BE CONCEALED CHLORINATED WITH FILTRATION.

BELOW STONES INSTALLATION:
Hot-dip galvanised and customised removable heavy duty industrial grating to cover pump room below.

PLAN : Water feature #10

SCALE 1:50

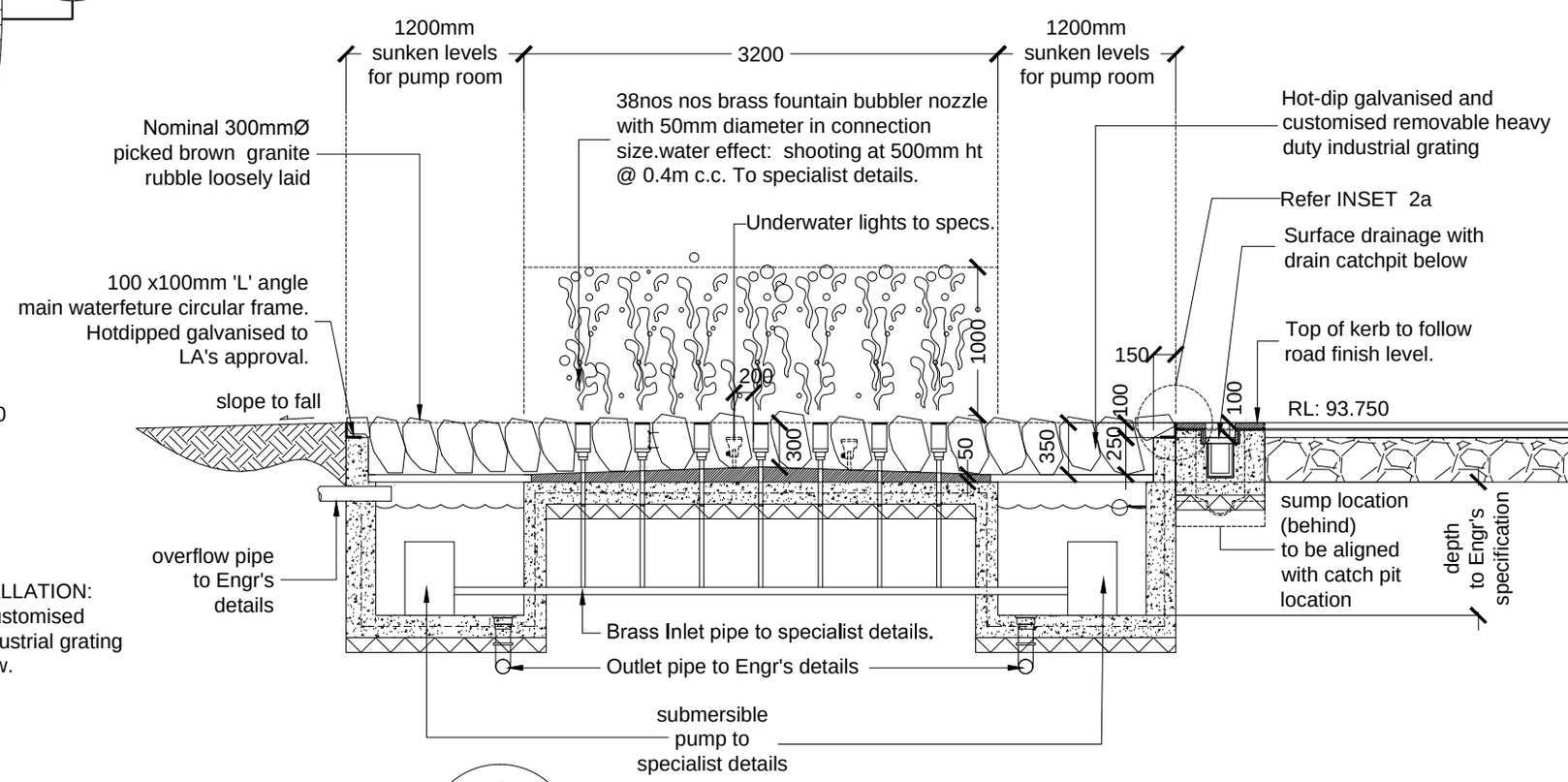

2 INSET **TYPICAL SECTION :** Water feature #10

SCALE 1:50