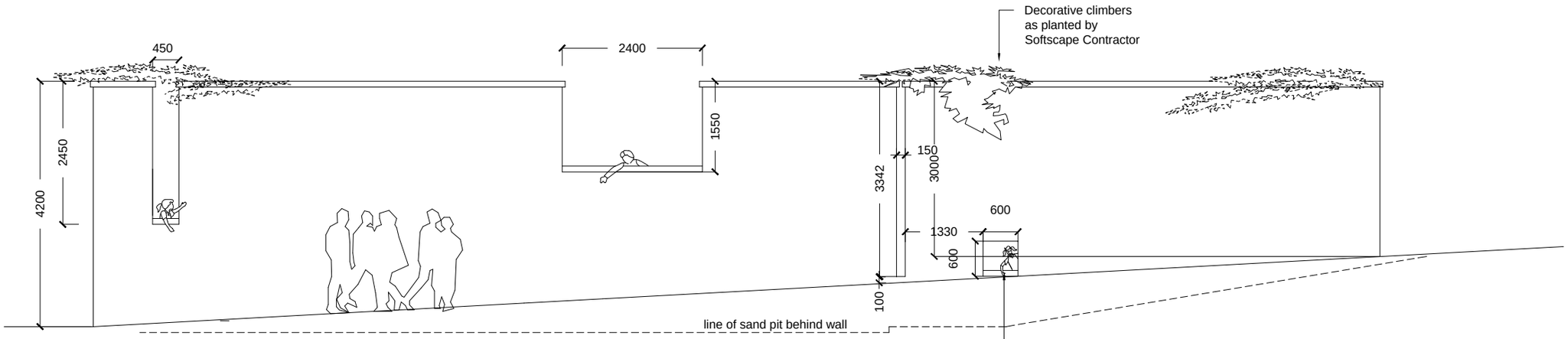

ELEVATION A: Rear side of Playground Feature Wall scale 1:200

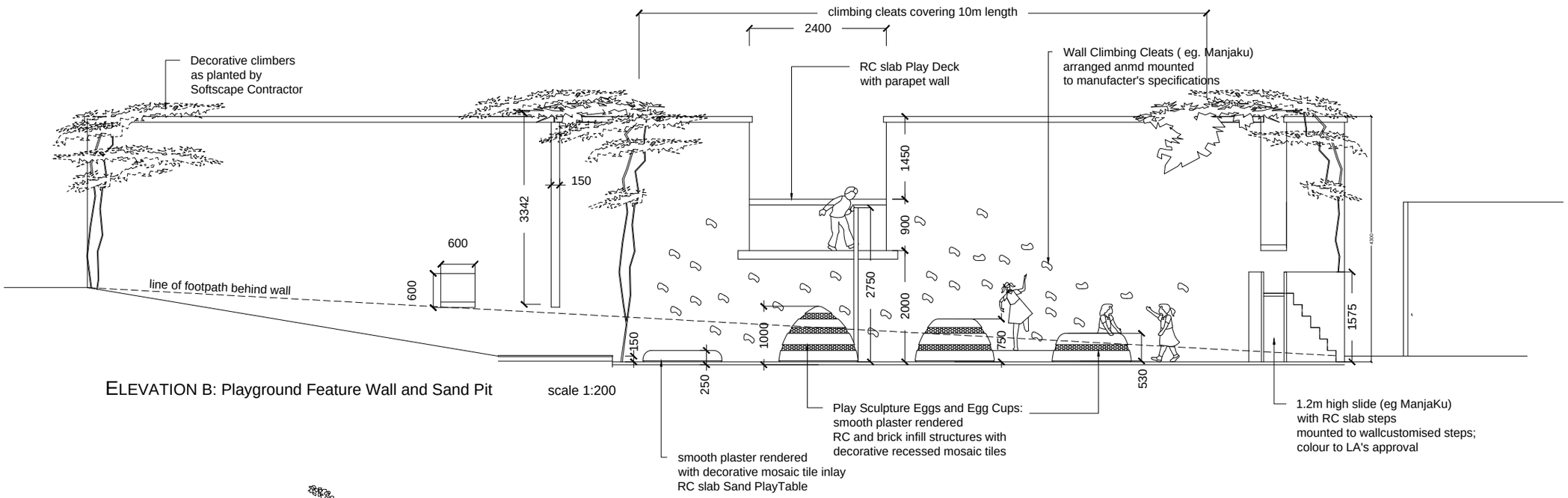

ELEVATION B: Playground Feature Wall and Sand Pit scale 1:200

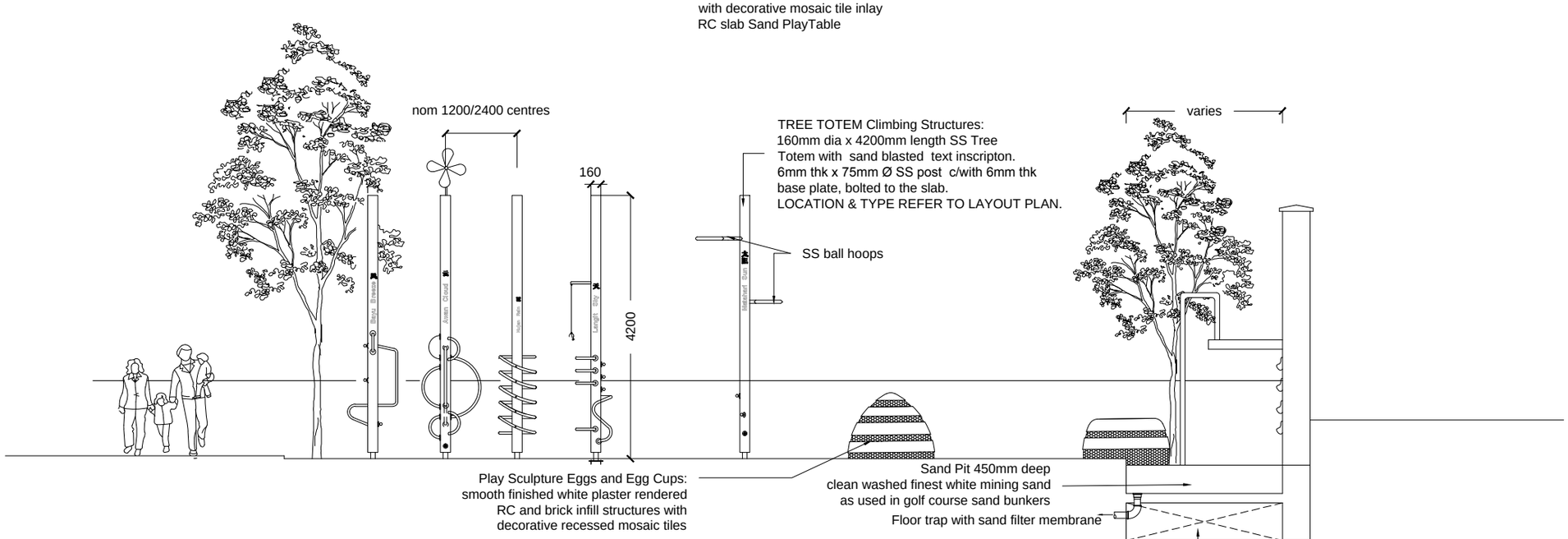

ELEVATION C: Playground with Totem Trees and Sculpture Eggs scale 1:200